NORTHERN LIGHTS

M673LD3

5 kW
60 Hz / 1800 RPM

4.5 kW
50 Hz / 1500 RPM

Service Side
(Shown with Optional Sound Enclosure)

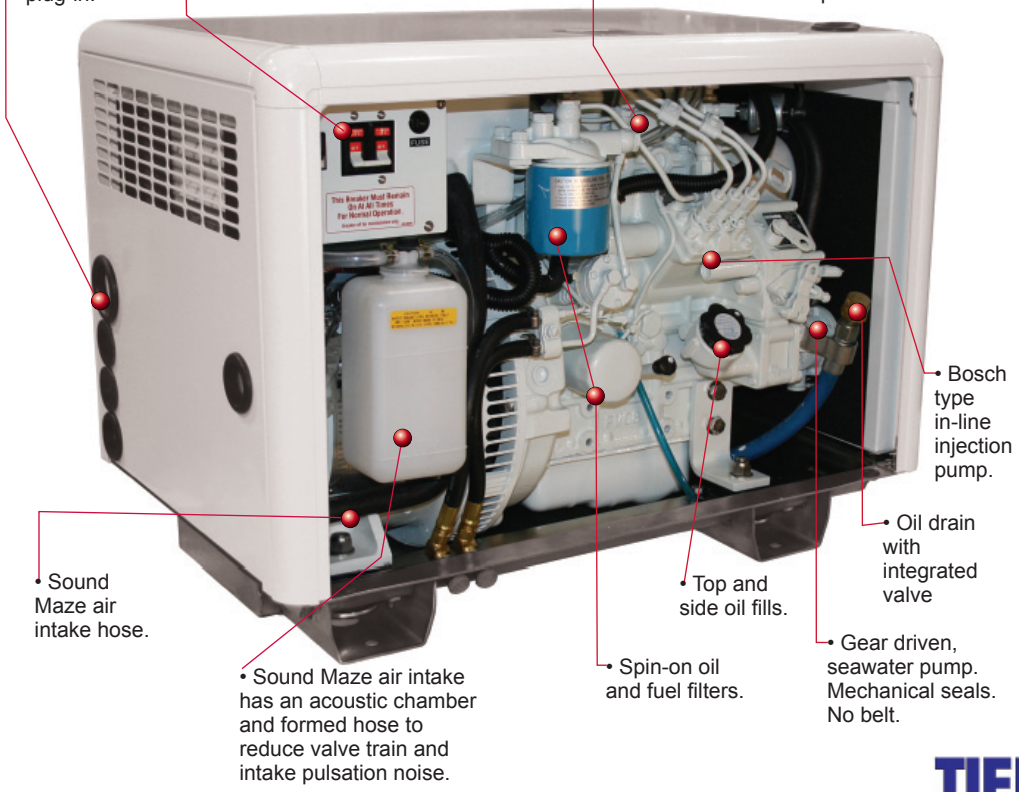

Non- Service Side

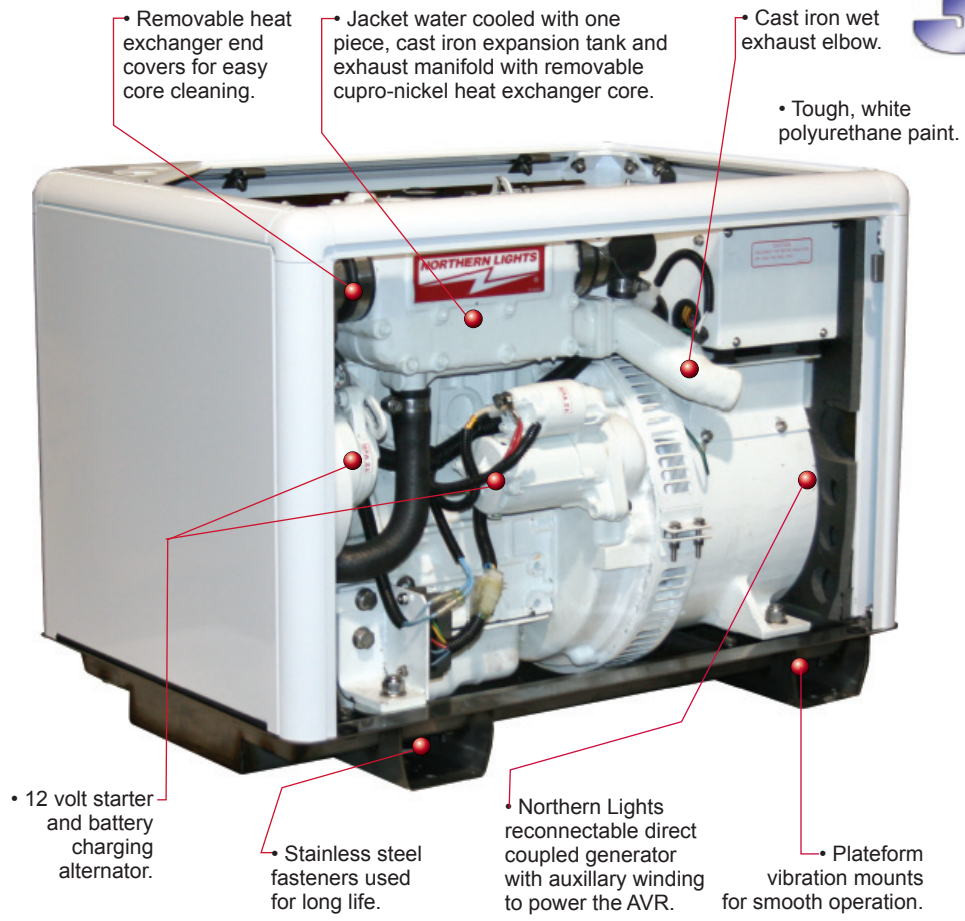

TIER 3

Ask to see most company's 5kW marine generator sets, and you'll likely see a light, fairly disposable machine, seemingly built as an afterthought.

Not Northern Lights. Our 5kW M673LD3 is built with the careful engineering and meticulous craftsmanship that has defined every Northern Lights product for over fifty years.

Northern Lights starts with a heavy duty base engine. Then our unique marinization process creates a machine specifically designed for the unforgiving rigors of the marine environment. Adding a sturdy generator end creates the most reliable, durable and simple to use marine power solution on the market.

The M673LD3 is designed for unmatched reliability. By achieving 5 kilowatts at 1800, instead of 3600 rpm, the revolutions are cut in half. Piston and cylinder wear is minimized.

The generator's automatic voltage regulator (AVR) is powered by an auxiliary AC stator winding that isolates it from the main windings. This ensures that the AVR has clean power to provide excitation for faster load response. Whether running the refrigerator, air conditioner, or any other accessory, the M673LD3 can make power dips and surges a thing of the past.

Comfort is always a consideration when it comes to Northern Lights generator power. The M673LD3 is built on a balanced three cylinder diesel. Four plateform isolation mounts reduce vibration transmission even further.

The Sound Maze air intake system is another Northern Lights innovation developed with your comfort in mind. Air enters through a molded rubber hose and an acoustic dampening chamber. This allows for clear air flow, with a minimal noise signature. For even greater sound attenuation, your M673LD3 can be equipped with our state of the art sound enclosure.

Because the M673LD3 meets all current USEPA Tier III emission standards, you can rest assured that your 5kW will be as clean as it is quiet and efficient.

NORTHERN LIGHTS®

AC Output[1]	
5 kW	60 Hz, 1800 RPM, 1 Ph, 1.0 PF, 120-240 V/25 A, 120 V/50A
4.5 kW	50 Hz, 1500 RPM, 1 Ph, 1.0 PF, 220 V/22.7 A
Voltage regulation	±5%
Lugger L673L Engine	
Type	Vertical inline 3 cylinder diesel
Displacement	46.4 in³ (0.761 ltr)
Bore/Stroke	2.64/2.83 in (67/72 mm)
HP @ RPM	10.1/1800 8.4/1500
Approx. fuel use	
1800 RPM @ full load[2]	0.59 gph (2.2 lph)
1800 RPM @ half load[2]	0.32 gph (1.2 lph)
1500 RPM @ full load[2]	0.50 gph (1.9 lph)
1500 RPM @ half load[2]	0.28 gph (1.1 lph)
Installation Data & Weight	
Wet exhaust elbow	1.5 inch (38 mm) OD
Raw water inlet	3/4 inch (19 mm) OD
Fuel inlet and return	5/16 inch ID Hose
Approximate dry weight	377 lbs (171 kg)

1. Based on SAE J1995 and ISO 3046. 2. Actual fuel consumption will vary depending on operating conditions.

M673LD3 Dimensional Drawing

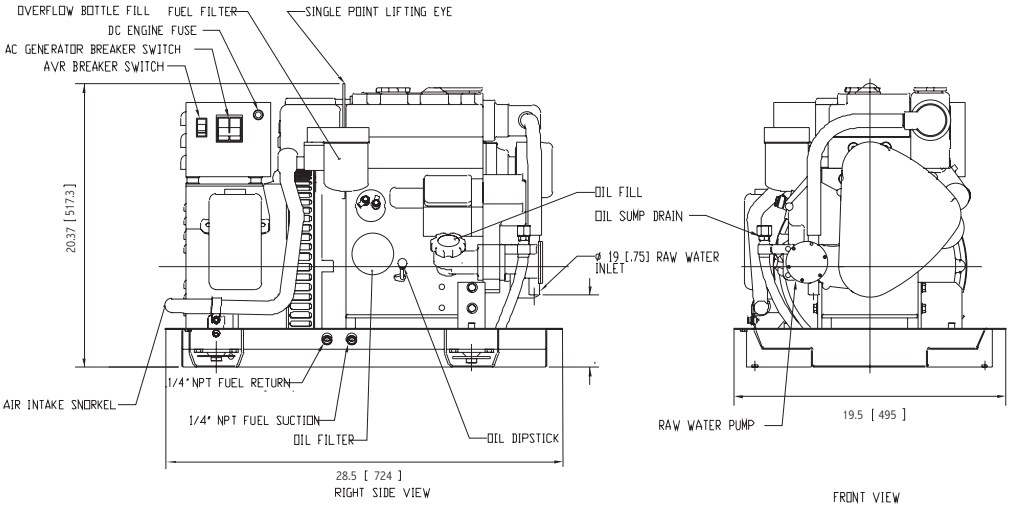

M673L3 Overall Dimensions L x W x H: 28.5 x 19.5 x 20.4 inch (724 x 495 x 517 mm)
Sound Enclosure Dimensions L x W x H: 28.5 x 19.5 x 20.8 inch (724 x 495 x 528 mm)
Sound Enclosure Weight: 48 lbs (22 kg)
Dimensions given in inches (mm). Dimensions subject to change without notice.
Contact dealer or visit www.northern-lights.com for most current installation drawings.

M673LD3 Features and Benefits

Engine Block
- Four cycle, 3 cylinder, liquid cooled, naturally aspirated, overhead valve diesel.
- Swirl combustion chambers improve fuel efficiency and reduce smoke.
- Glow plugs for quick cold starting.

Cooling System
- Freshwater cooling with siphon break.
- Heat exchanger or keel cooled.
- One-piece heat exchanger, expansion tank and liquid cooled exhaust manifold. Fewer troublesome hoses and gaskets. Cast iron to resist corrosion and electrolysis.
- Heat exchanger cooling is standard. Cupro-nickel, tube-type heat exchanger has removable ends for easy cleaning. Rubber impeller seawater pump of bronze and stainless steel is gear driven; no belt.

Fuel System
- Fuel system is self-venting.
- Injection pump with 5% mechanical governor for close AC frequency control.
- Pintle injectors with replaceable tips.
- Mechanical lift pump with hand primer. No electric pump to fail.
- Large spin-on fuel filter.
- Steel fuel lines.
- Stop solenoid acts directly on the fuel rack eliminating linkage problems.

Intake and Exhaust
- Meets US EPA Tier III emission standards.
- Washable air cleaner.
- Cast aluminum intake manifold with Sound Maze air intake reduces intake noise.
- Cast iron, wet exhaust elbow for safety.

Lubrication System
- Full flow, spin-on oil filter with bypass.
- 3.1 qt (3 ltr) oil capacity for better lubrication and 200 hour oil change intervals.
- Oil drain for quick, clean oil changes.
- Closed crankcase vent system traps oil vapor and keeps engine room clean.

DC Electrical System
- DC system uses reliable relays instead of an unrepairable printed circuit board.
- 12 volt starter motor and battery charging alternator with regulator and belt guard.
- Standard panel: Remote mount S-1B has hour meter, stop-start switch with run light and preheat switch.
- Expandable to six panels up to 110 feet from the set.
- 20 foot (6m) plug-in panel harness lets you mount your panel anywhere onboard. Better than inaccessible unit mount panels that are prone to vibration problems.
- Low oil pressure, high coolant temp and high exhaust temp safety shutdowns standard.

AC Generator
- Northern Lights, direct coupled, four pole, revolving field, four lead reconnectable generator with Class "H" insulation and prelubricated bearing. Conservative heat rise rating: 95°C/50°C ambient .
- External automatic voltage regulator gives you ±5% voltage regulation. AVR powered by dedicated AC winding for improved motor starting. AVR circuit breaker.
- 30 amp mainline circuit breaker protects generator from AC overloads and shorts.

New enclosure package is 23% smaller than previous design

Northern Lights' revolutionary new sound enclosure shares a base frame with the generator set, creating a compact power and sound attenuation package and boasts 23% less overall cubic volume than the previous enclosed units.

- Vibration isolation mounts for smooth, quiet performance
- Stainless steel paddle latch on service side.
- Interior panel retention system allows generator access at nonservice panels without using tools.
- Electrogalvanized steel composition allows for single layer of foam insulation, with superior noise attenuation.
- Protective film coating ensures safety and longevity.
- External fuel connections for easy installation.
- Front exhaust exit option.
- Tough, white, powder-coat finish.

Dealer

4420 14th Ave. NW., Seattle WA 98107
Tel: 206-789-3880 • 1-800-762-0165 • Fax: 206-782-5455
Information and dimensions subject to change without notice.
Northern Lights and Lugger are registered trademarks of Northern Lights, Inc.
© 2010 All rights reserved. Litho USA. L744 3/11

NORTHERN LIGHTS®

www.northern-lights.com