Property of Yanmar Marine International (All rights reserved).

DETAIL OF COUPLING

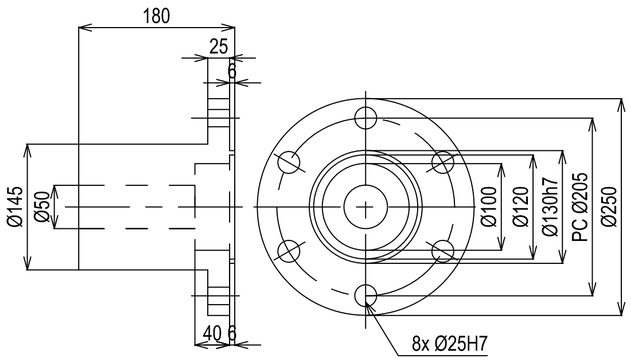

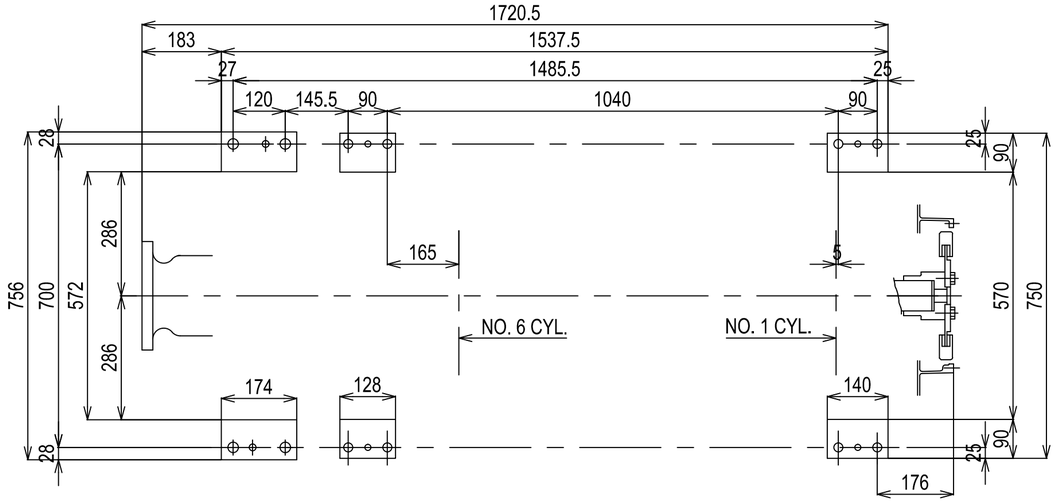

DETAIL OF FRONT PTO

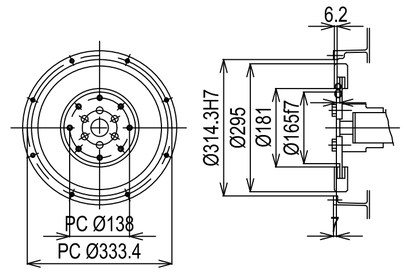

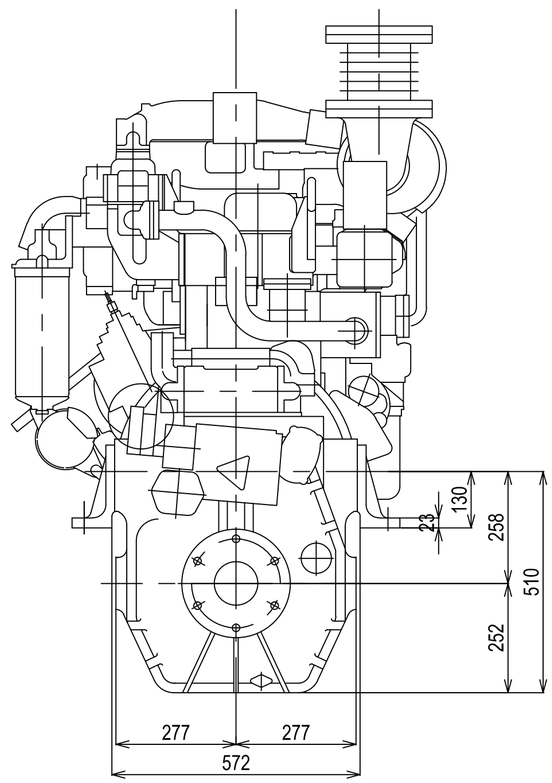

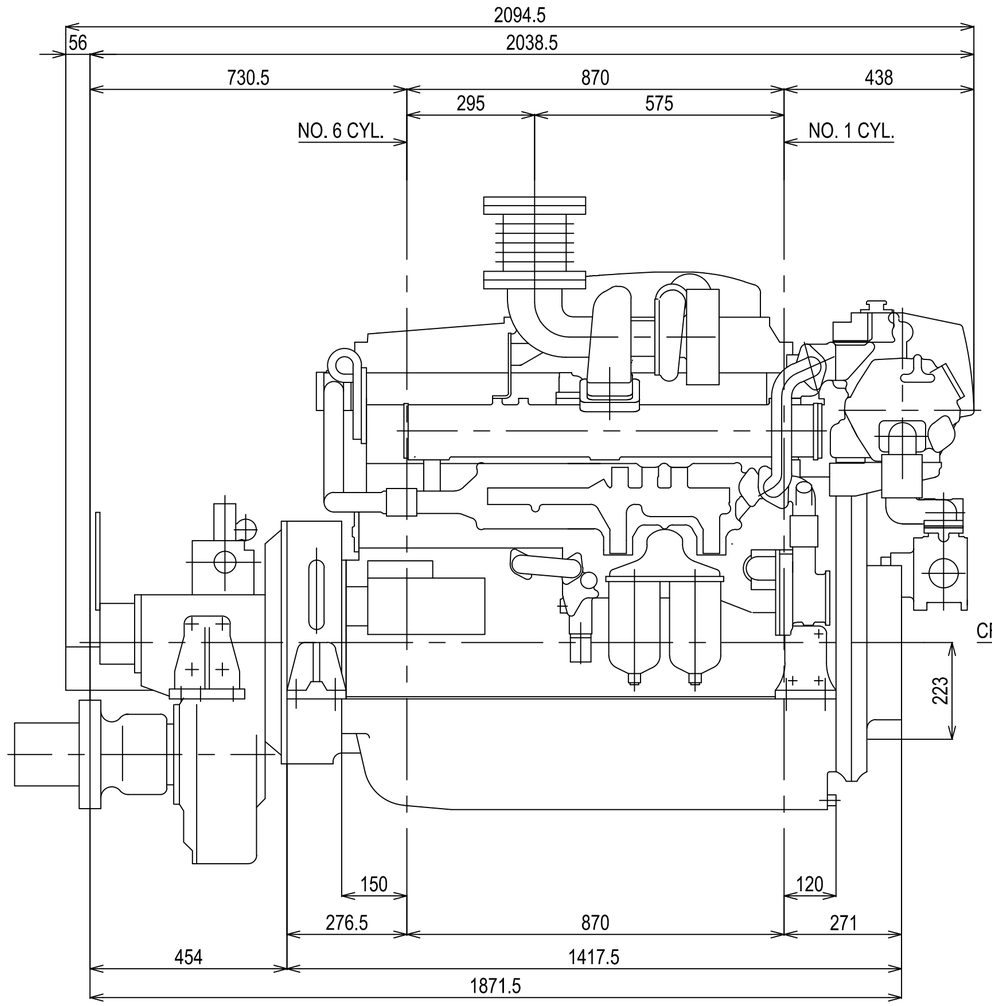

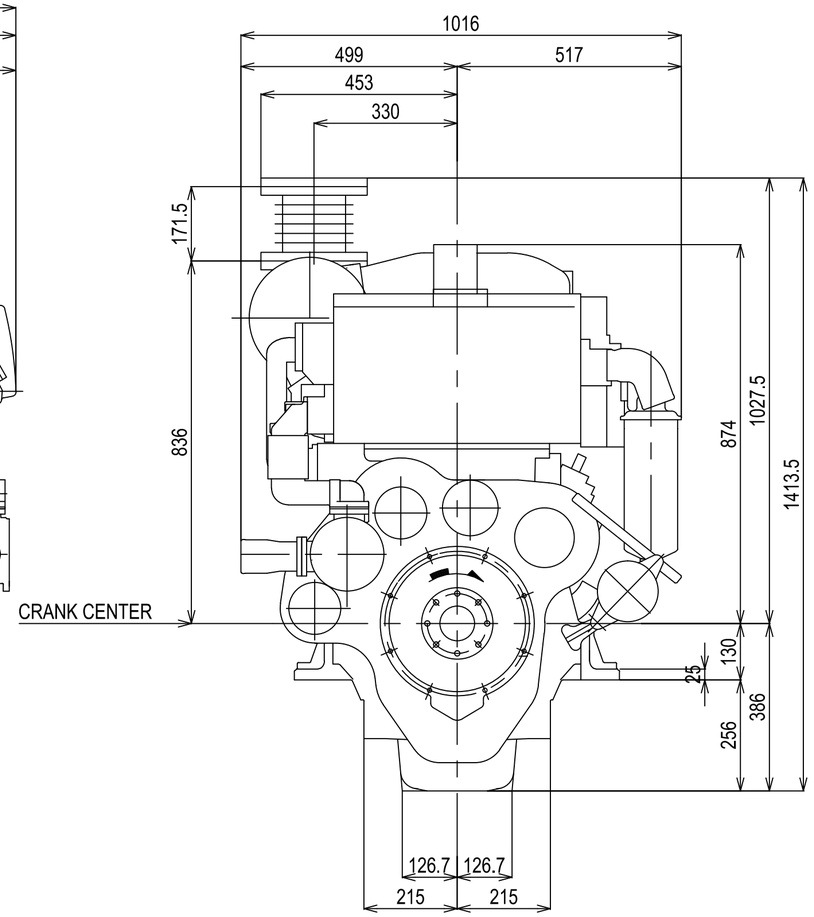

DETAIL OF MOUNTING BLOCK

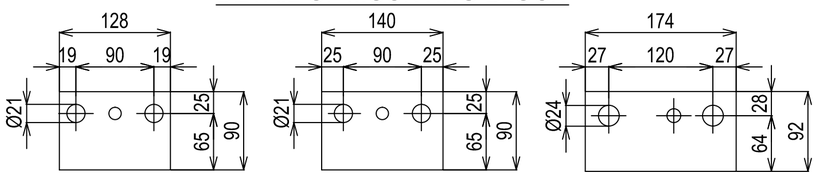

Serie:	HA2	Engine:	6HA2M-WHTxYX-120L	Release:	R2011-1
Scale:	1:10 (1:5)	Date:	01-01-2011	Dimensions:	mm

YANMAR.