Property of Yanmar Marine International (All rights reserved).

3RD ANGLE PROJECTION

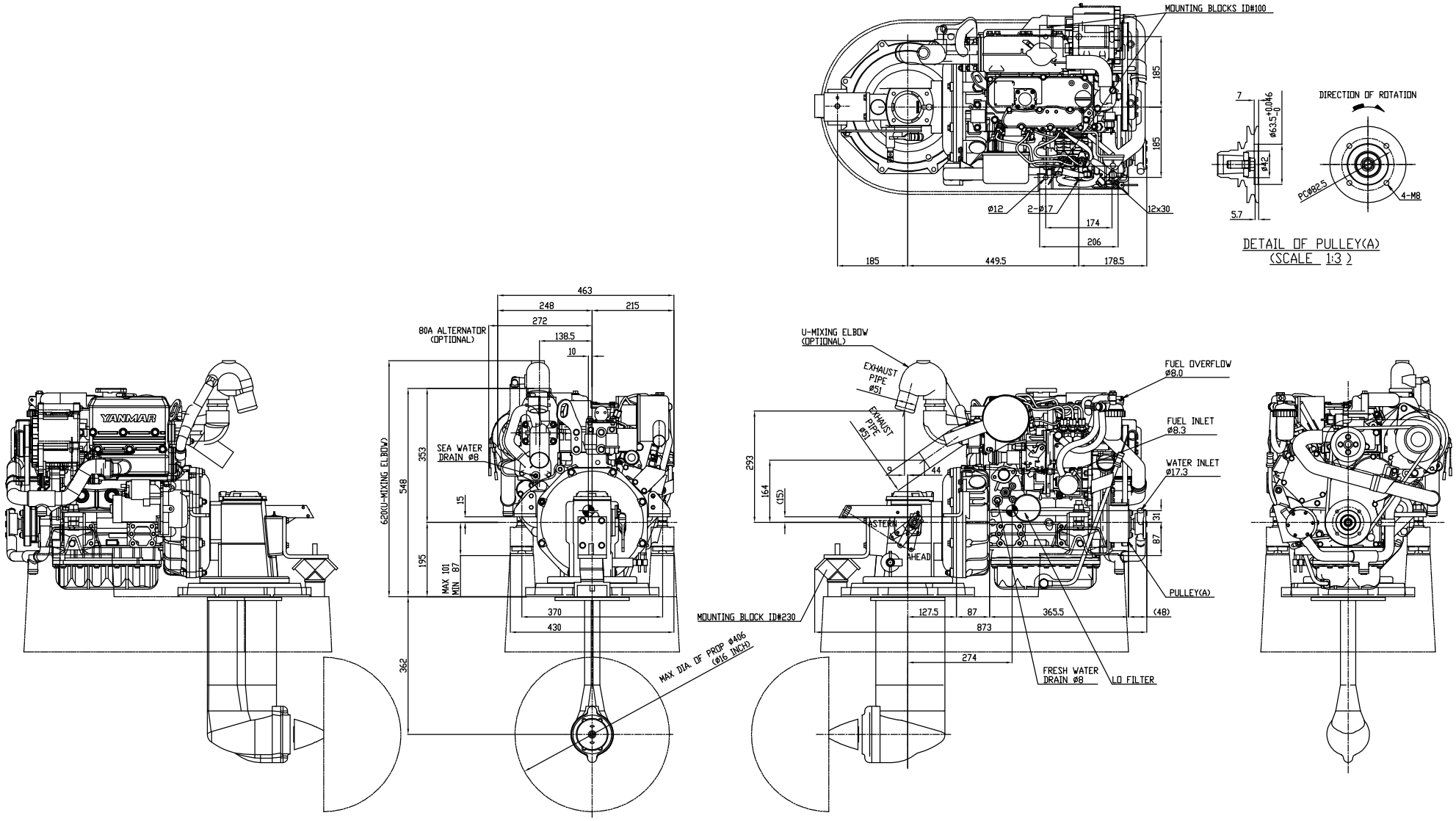

NOTE
1.DWG. SHOWS MOUNTING BLOCKS AT ORIGINAL HEIGHT.
2.ENGINE WEIGHT WILL COMPRESS BLOCKS BY 4.5mm(APPROX.).
3.MOUNTING BLOCKS ARE EQUIPPED FOR STANDARD ACCESSARY.
4. ⊕ SHOWS CENTER OF GRAVITY.
5.ALL DIMENSIONS ARE IN MILLIMETERS

Scale 1/5 (1/3)	YANMAR MARINE INTERNATIONAL 24 April 2005	YM-3YM20 WITH SD20

GROUP, USER=EM2, MT01